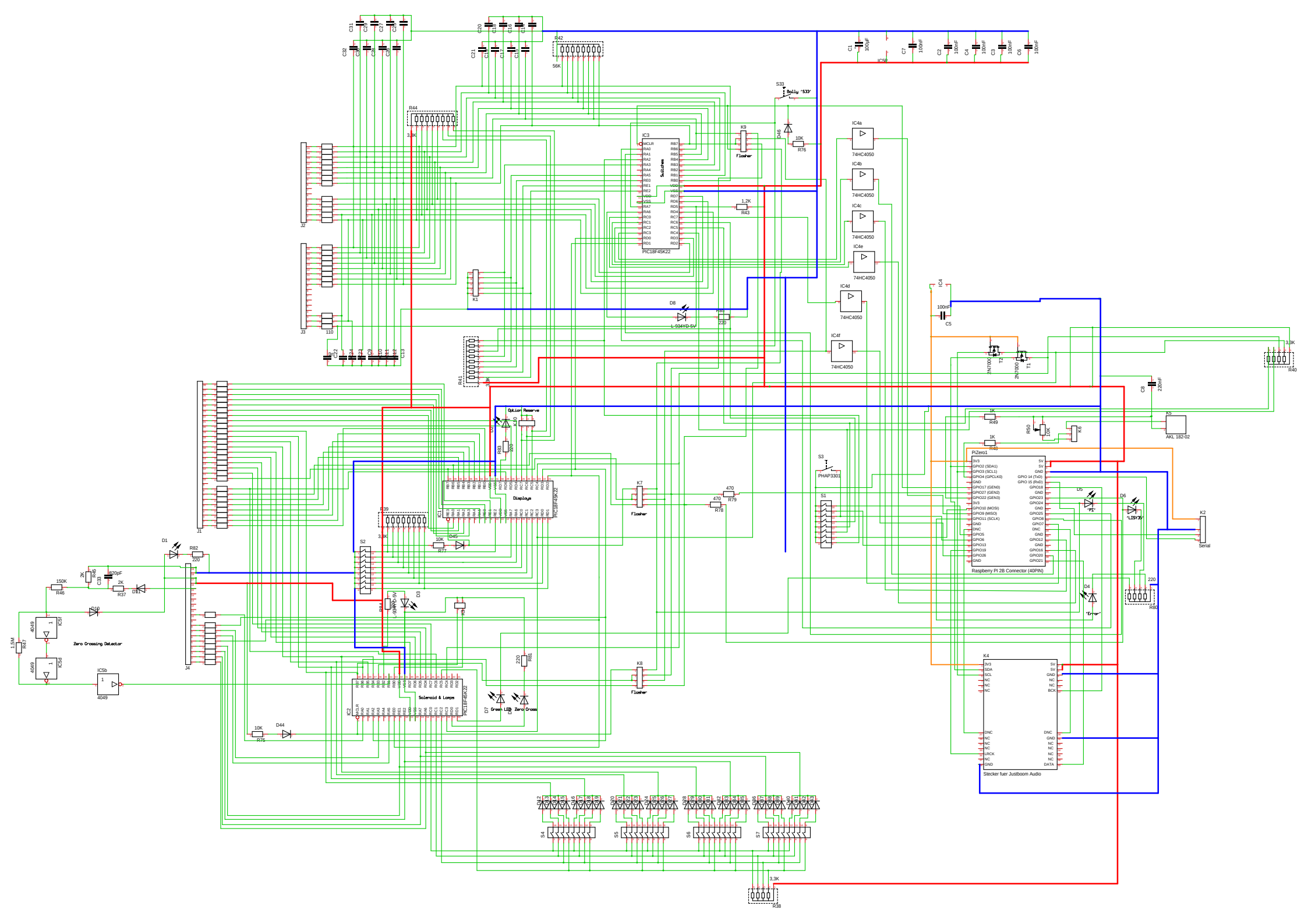

Zero Crossing Detector
Solenoid & Lamps
Displays
Option Reserve
Switches
PIC18F45K22
Flasher
Green LED
Zero Cross
Bolly 'S33'
74HC4050
PiZero1
Raspberry PI 2B Connector (40PIN)
Stecker fuer Justboom Audio
AKL 182-02
Serial
'PI'
'LISYJS'
'Error'
L-934YD-5V
PHAP3301