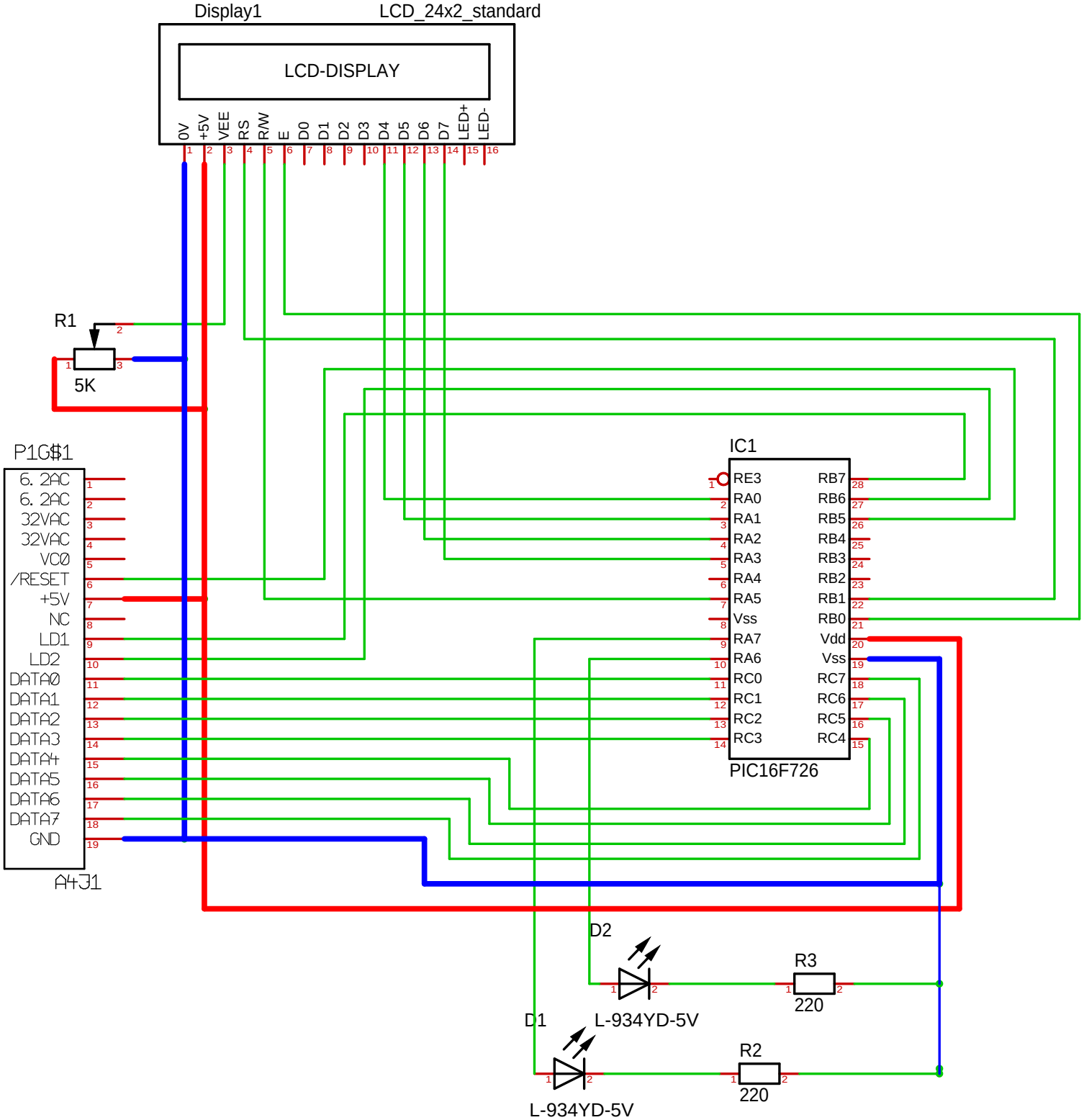
Display1
LCD_24x2_standard
LCD-DISPLAY
0V
+5V
VEE
RS
R/W
E
D0
D1
D2
D3
D4
D5
D6
D7
LED+
LED-
R1
5K
P1G$1
6. 2AC
6. 2AC
32VAC
32VAC
VC0
/RESET
+5V
NC
LD1
LD2
DATA0
DATA1
DATA2
DATA3
DATA4
DATA5
DATA6
DATA7
GND
A4J1
IC1
RE3
RA0
RA1
RA2
RA3
RA4
RA5
Vss
RA7
RA6
RC0
RC1
RC2
RC3
RB7
RB6
RB5
RB4
RB3
RB2
RB1
RB0
Vdd
Vss
RC7
RC6
RC5
RC4
PIC16F726
D2
L-934YD-5V
R3
220
D1
L-934YD-5V
R2
220