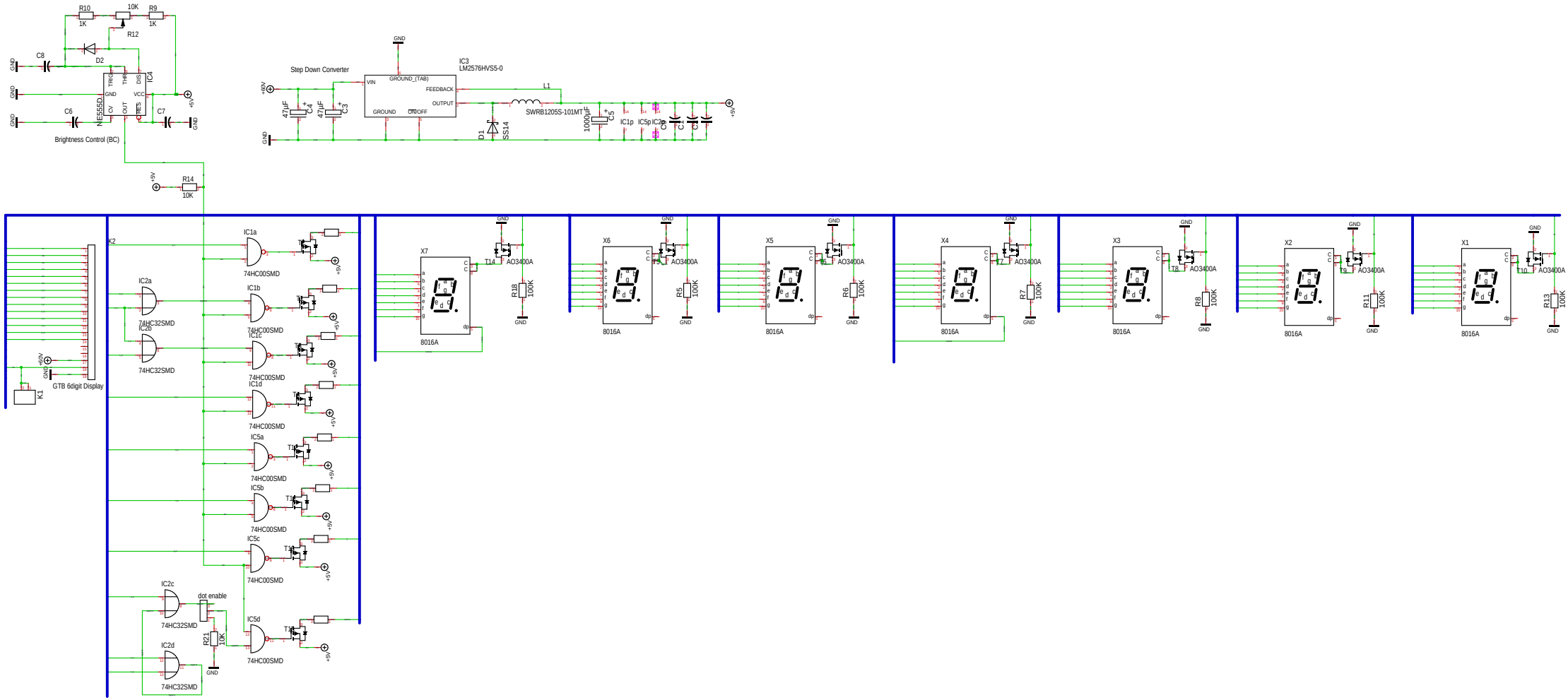

R10
1K
10K
R9
1K
R12
D2
C8
GND
IC4
NE555D
TRIG
THR
DIS
GND
VCC
CV
OUT
RES
C6
C7
+5V
Brightness Control (BC)
R14
10K
Step Down Converter
IC3
LM2576HVS5-0
VIN
GROUND_(TAB)
FEEDBACK
OUTPUT
GROUND
ON/OFF
47µF
C4
C3
L1
SWRB1205S-101MT
1000µF
C5
D1
SS14
IC1p
IC5p
IC2p
C9
C1
C2
+60V
K2
K1
GTB 6digit Display
IC1a
IC1b
IC1c
IC1d
IC2a
IC2b
IC2c
IC2d
IC5a
IC5b
IC5c
IC5d
74HC00SMD
74HC32SMD
dot enable
R21
10K
X7
X6
X5
X4
X3
X2
X1
8016A
T14
T5
T6
T7
T8
T9
T10
AO3400A
R18
R5
R6
R7
R8
R11
R13
100K