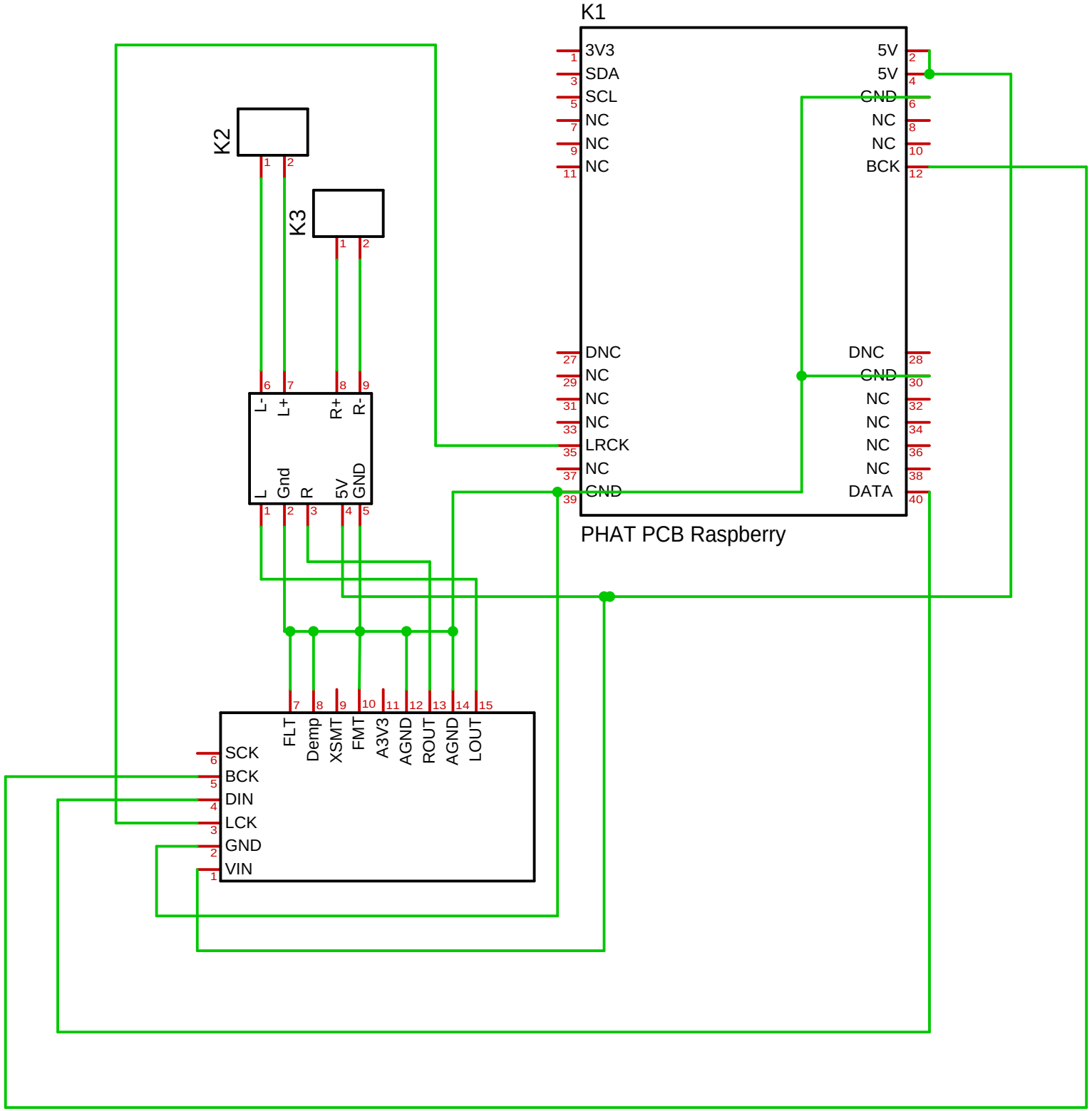
K1
3V3
SDA
SCL
NC
NC
NC
5V
5V
GND
NC
NC
BCK
DNC
NC
NC
NC
LRCK
NC
GND
DNC
GND
NC
NC
NC
NC
NC
DATA
PHAT PCB Raspberry
K2
K3
L-
L+
R+
R-
L
Gnd
R
5V
GND
FLT
Demp
XSMT
FMT
A3V3
AGND
ROUT
AGND
LOUT
SCK
BCK
DIN
LCK
GND
VIN