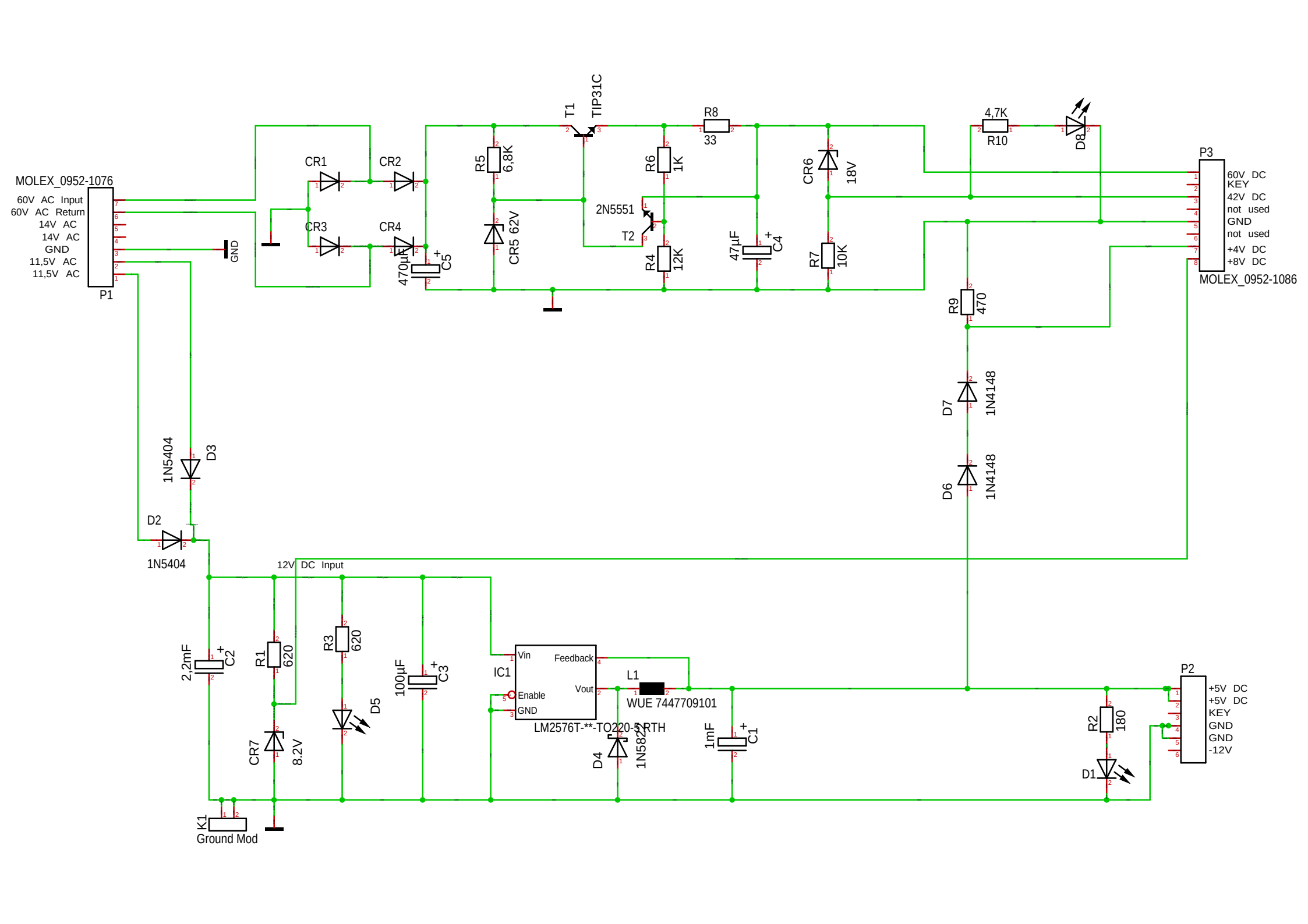
MOLEX_0952-1076
60V AC Input
60V AC Return
14V AC
14V AC
GND
11,5V AC
11,5V AC
P1
GND
CR1
CR2
CR3
CR4
470µF
C5
R5
6,8K
CR5 62V
T1
TIP31C
R6
1K
2N5551
T2
R4
12K
R8
33
47µF
C4
CR6
18V
R7
10K
4,7K
R10
D8
P3
60V DC
KEY
42V DC
not used
GND
not used
+4V DC
+8V DC
MOLEX_0952-1086
R9
470
D7
1N4148
D6
1N4148
1N5404
D3
D2
1N5404
12V DC Input
2,2mF
C2
R1
620
CR7
8.2V
R3
620
D5
100µF
C3
IC1
Vin
Feedback
Enable
Vout
GND
LM2576T-**-TO220-5RTH
L1
WUE 7447709101
D4
1N5822
1mF
C1
P2
+5V DC
+5V DC
KEY
GND
GND
-12V
R2
180
D1
K1
Ground Mod