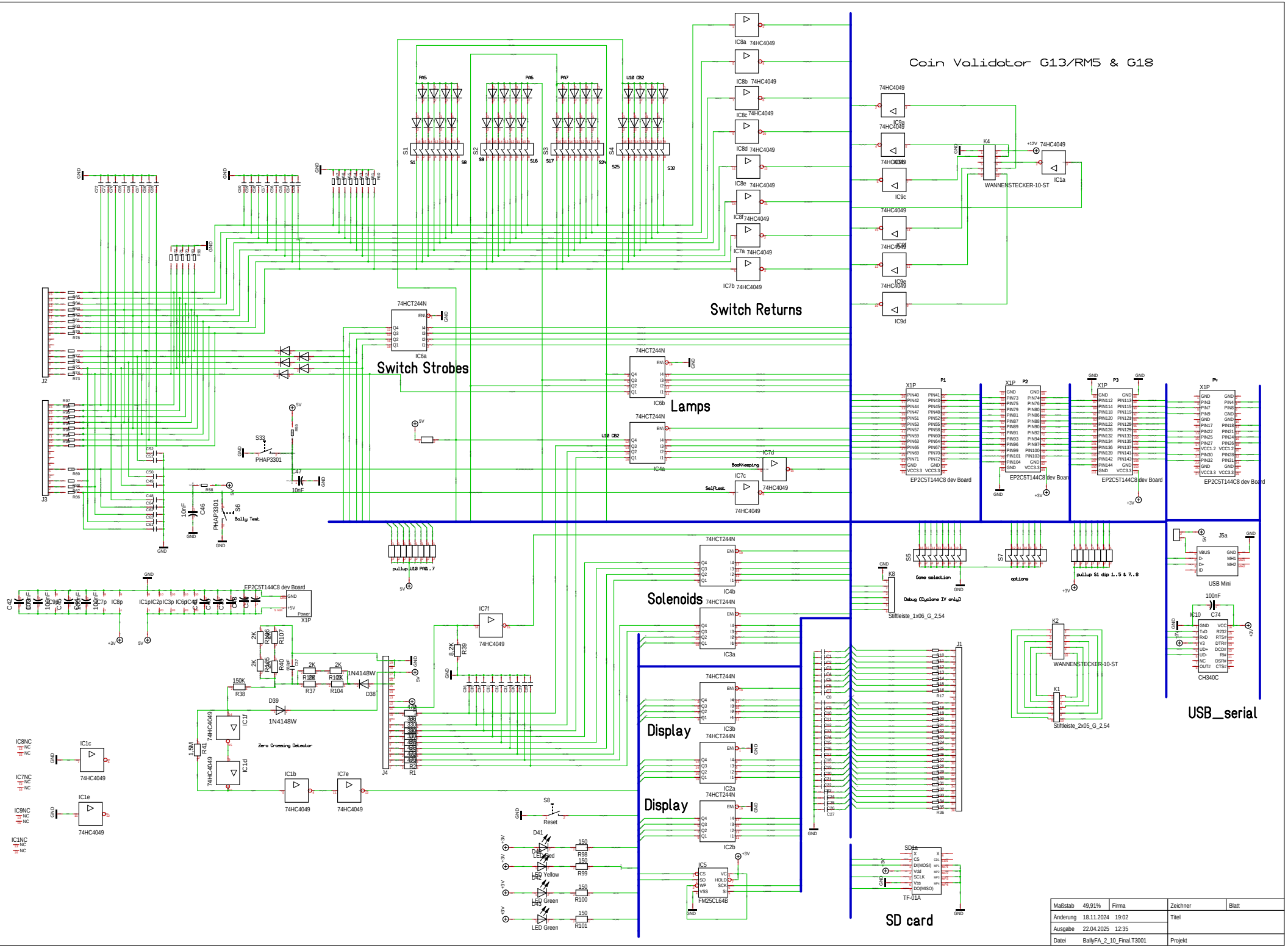
Coin Validator G13/RM5 & G18
Switch Returns
Switch Strobes
Lamps
Solenoids
Display
Display
USB_serial
SD card
Zero Crossing Detector
Bally Test
Reset
Game selection
options
Debug (Cyclone IV only)
pullup S1 dip 1..5 & 7..8
pullup U18 PA1.7
BookKeeping
SelfTest
EP2C5T144C8 dev Board
WANNENSTECKER-10-ST
Stiftleiste_1x06_G_2.54
Stiftleiste_2x05_G_2.54
USB Mini
CH340C
FM25CL64B
TF-01A
74HC4049
74HCT244N
PHAP3301
1N4148W
LED Green
LED Yellow
Maßstab 49,91%
Änderung 18.11.2024 19:02
Ausgabe 22.04.2025 12:35
Datei BallyFA_2_10_Final.T3001
Firma
Zeichner
Blatt
Titel
Projekt