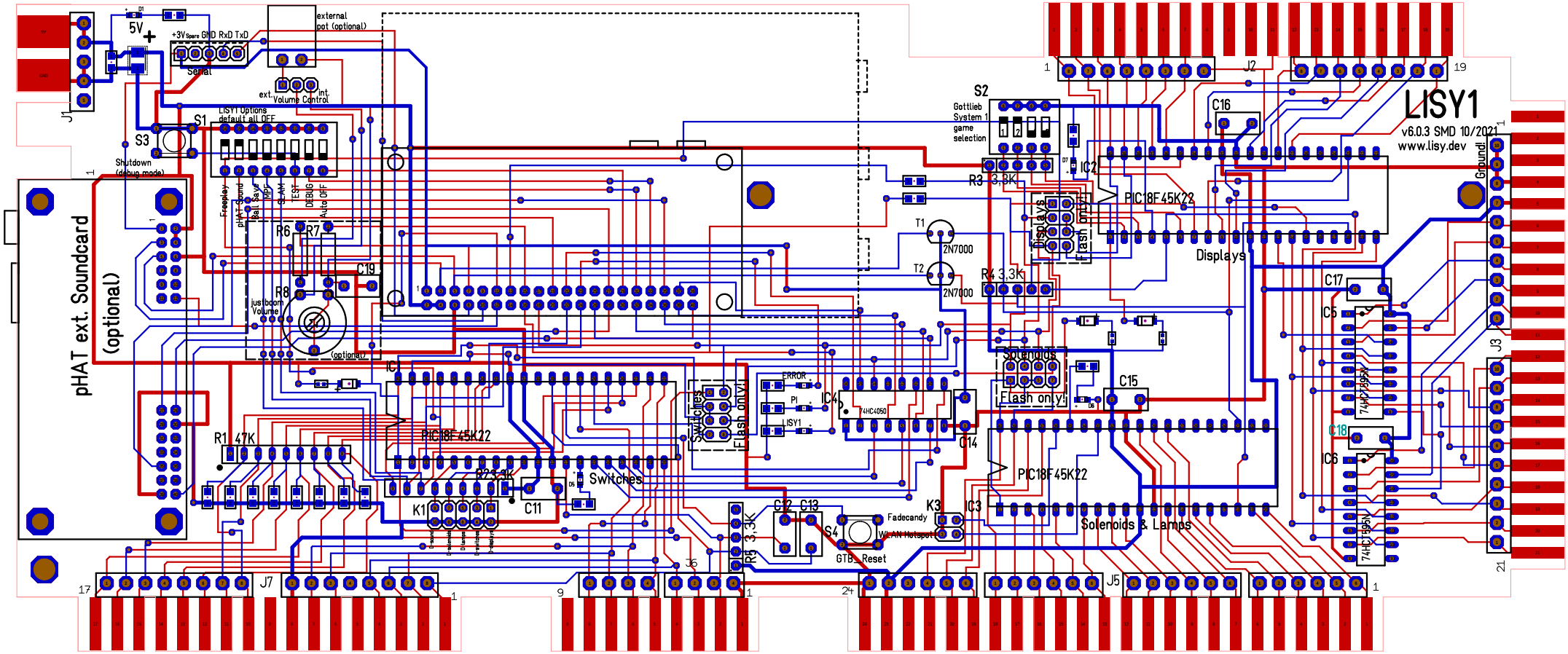
LISY1
v6.0.3 SMD 10/2021
www.lisy.dev
pHAT ext. Soundcard
(optional)
5V
+3V3spare GND RxD TxD
Serial
external pot (optional)
ext.
int.
Volume Control
LISY1 Options
default all OFF
Freeplay
pHAT Sound
Ball Save
MPU
SLAM
TEST
DEBUG
Auto OFF
Shutdown
(debug mode)
justboom
Volume
(optional)
S1
S3
S2
Gottlieb
System 1
game
selection
R1 47K
R2 3,3K
R3 3,3K
R4 3,3K
R5 3,3K
R6
R7
R8
C11
C12
C13
C14
C15
C16
C17
C18
C19
C5
C6
T1
T2
2N7000
IC1
IC2
IC3
IC4
IC5
IC6
PIC18F45K22
74HC4050
74HC595N
K1
K3
S4
Fadecandy
WLAN Hotspot
GTB Reset
ERROR
PI
LISY1
Switches
Flash only!
Displays
Solenoids
Solenoids & Lamps
J1
J2
J3
J5
J6
J7
Ground