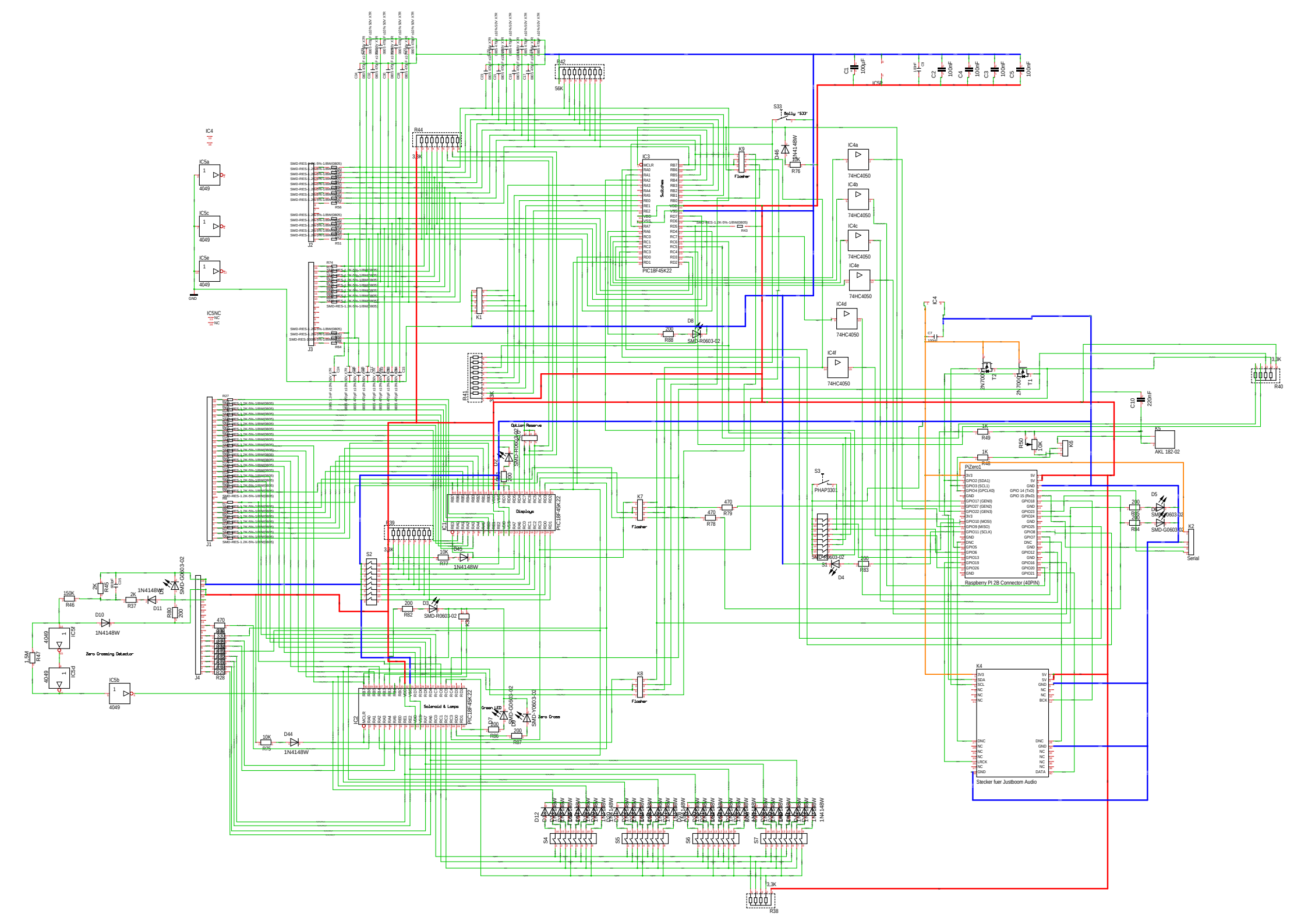

IC3
PIC18F45K22
Switches
IC1
PIC18F45K22
Displays
IC2
PIC18F45K22
Solenoid & Lamps
Zero Cross
Zero Crossing Detector
Option Reserve
Flasher
Bally 'SJJ'
IC4a
IC4b
IC4c
IC4d
IC4e
IC4f
74HC4050
IC5a
IC5b
IC5c
IC5d
IC5e
IC5f
4049
IC5NC
GND
J1
J2
J3
J4
K1
K2
K3
K4
K5
K6
K7
K8
K9
S1
S2
S3
S4
S5
S6
S7
S33
PHAP3301
PiZero1
Raspberry PI 2B Connector (40PIN)
Stecker fuer Justboom Audio
AKL 182-02
Serial
SMD-R0603-02
SMD-G0603-02
SMD-Y0603-02
1N4148W
2N7000
Bally 'SJJ'