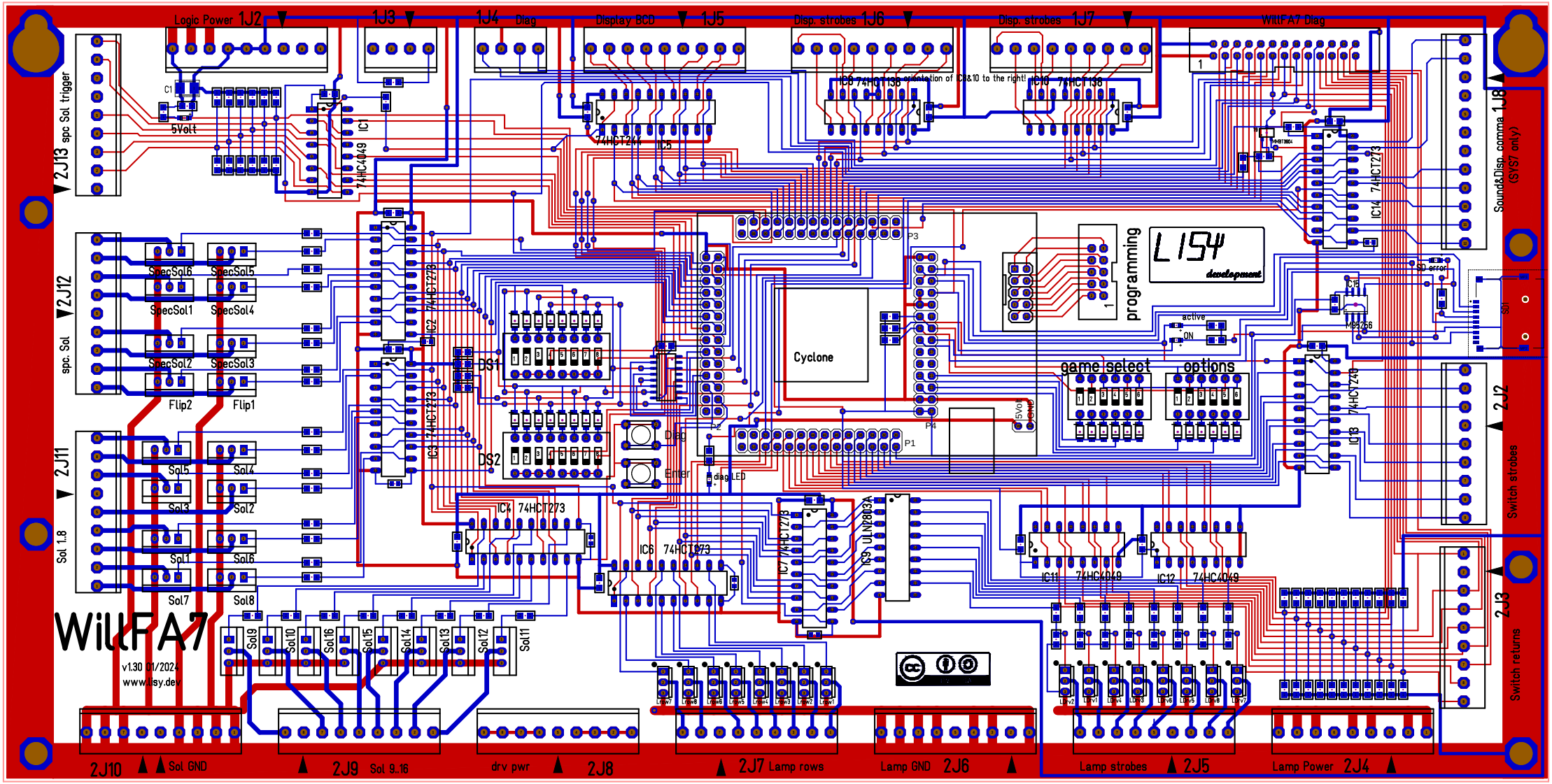
Logic Power 1J2
1J3
1J4 Diag
Display BCD 1J5
Disp. strobes 1J6
Disp. strobes 1J7
WillFA7 Diag
IC8 74HCT138 orientation of IC8&10 to the right!
IC10 74HCT138
74HCT244 IC5
IC1 74HC4049
5Volt
C1
2J13 spc Sol trigger
2J12 spc. Sol
2J11 Sol 1.8
SpecSol6
SpecSol5
SpecSol1
SpecSol4
SpecSol2
SpecSol3
Flip2
Flip1
Sol5
Sol4
Sol3
Sol2
Sol1
Sol6
Sol7
Sol8
Sol9
Sol10
Sol16
Sol15
Sol14
Sol13
Sol12
Sol11
IC2 74HCT273
IC3 74HCT273
DS1
DS2
IC4 74HCT273
IC6 74HCT273
IC7 74HCT273
IC9 ULN2803A
Cyclone
P3
P4
P1
P2
Diag
Enter
diag LED
programming
L154
development
active
ON
game select
options
IC13 74HCT240
IC14 74HCT273
IC11 74HC4049
IC12 74HC4049
Sound&Disp. comma 1J8
(SYS7 only)
SD error
M09256
2J2
Switch strobes
2J3
Switch returns
WillFA7
v1.30 01/2024
www.bsy.dev
2J10 Sol GND
2J9 Sol 9..16
drv pwr
2J8
2J7 Lamp rows
Lamp GND 2J6
Lamp strobes
2J5
Lamp Power 2J4